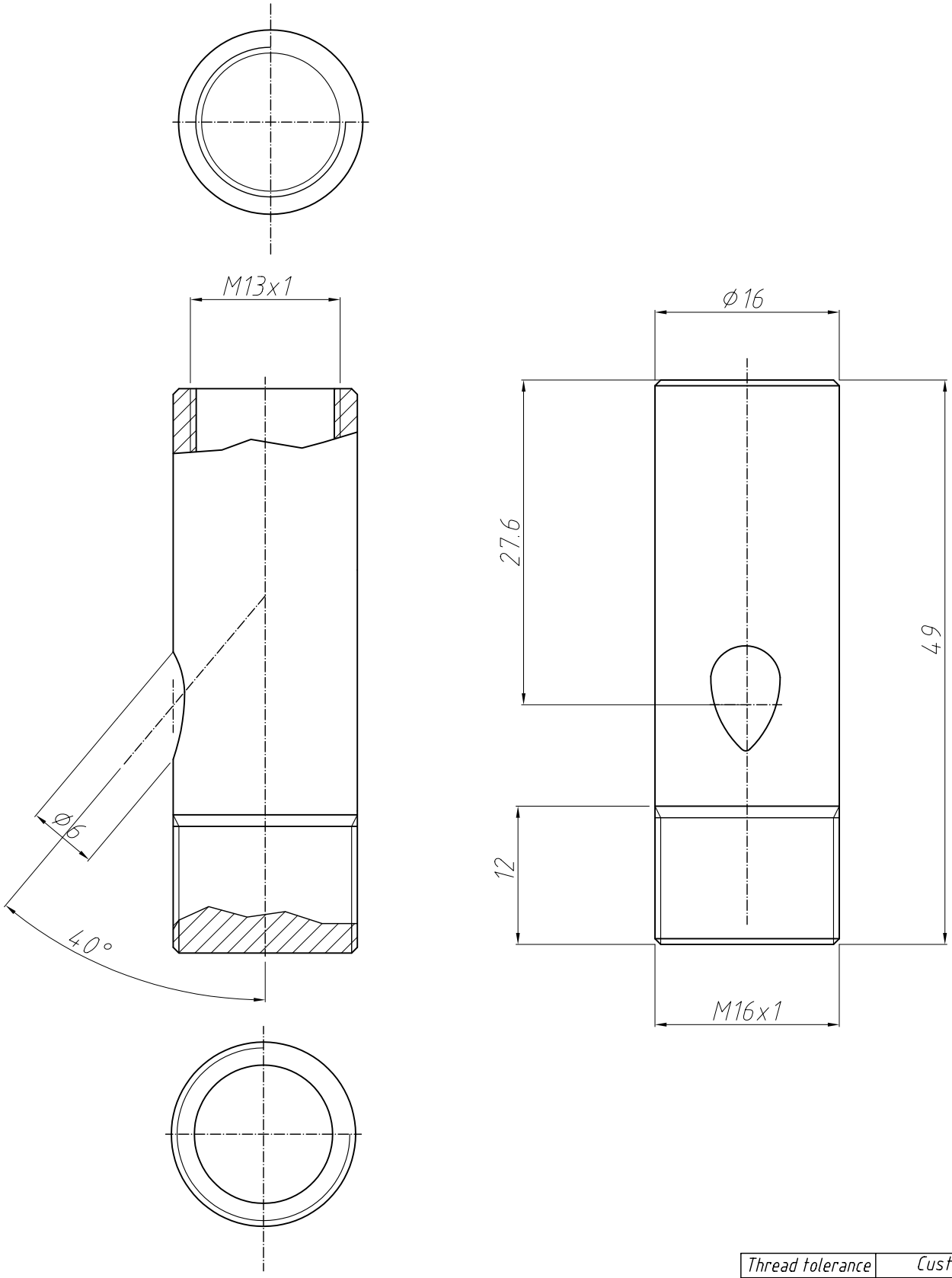

Thread tolerance	Customer
Nut	6H
Bolt	6g

Scale: 2:1	Size: A4	Tolerance: DIN/ISO 2768 c
Mass: 60,4g	AG:	Material: brass
MC:		Surface: nickel plated

					Date	Name
				Work	16.01.07	O.Ziegenhain
				Change		
				Release:		
A						
Status	Change	Date	Name			

Designation

Coupler ZW - M13ix1 / M16x1
to power feed barrel 029.002.972

REUTLINGER®
Frankfurt am Main - Germany

Caution Copyright DIN 34

Drawing No. K - 029.002.974 - A - GB
Ser. No.

Sheet 1
1 Sh.

Replc.f.:

Replcd.

16.01.2007 11:31:09